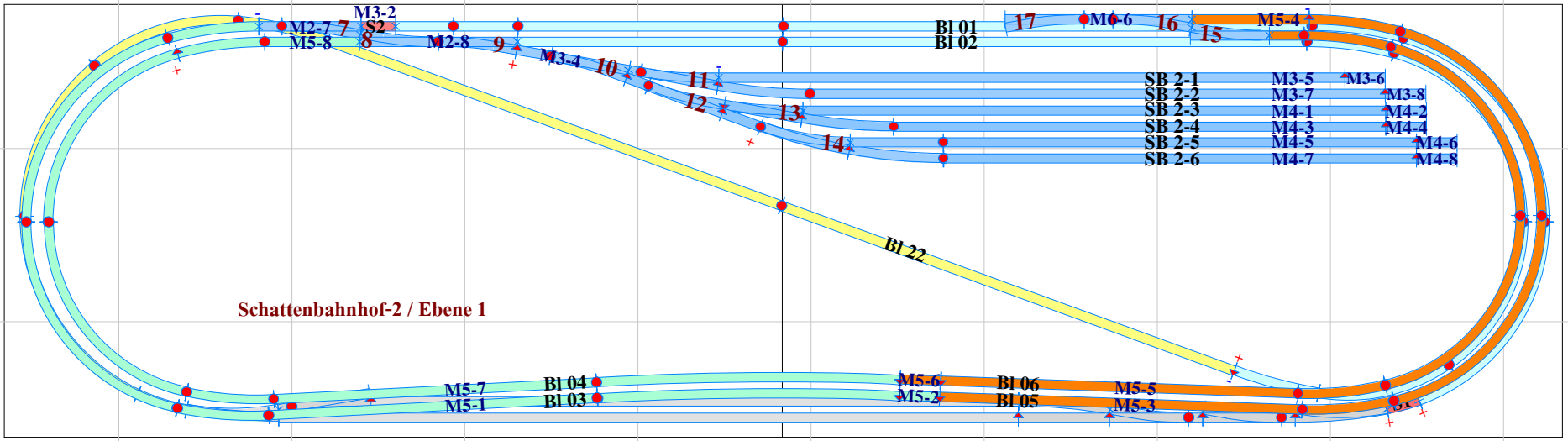
Schattenbahnhof-2 / Ebene 1
M3-2
M2-7
7
S2
M5-8
8
M2-8
9
M3-4
10
11
12
13
14
Bl 01
Bl 02
17
M6-6
16
15
M5-4
SB 2-1
SB 2-2
SB 2-3
SB 2-4
SB 2-5
SB 2-6
M3-5
M3-6
M3-7
M3-8
M4-1
M4-2
M4-3
M4-4
M4-5
M4-6
M4-7
M4-8
Bl 22
M5-7
M5-1
Bl 04
Bl 03
M5-6
M5-2
Bl 06
Bl 05
M5-5
M5-3

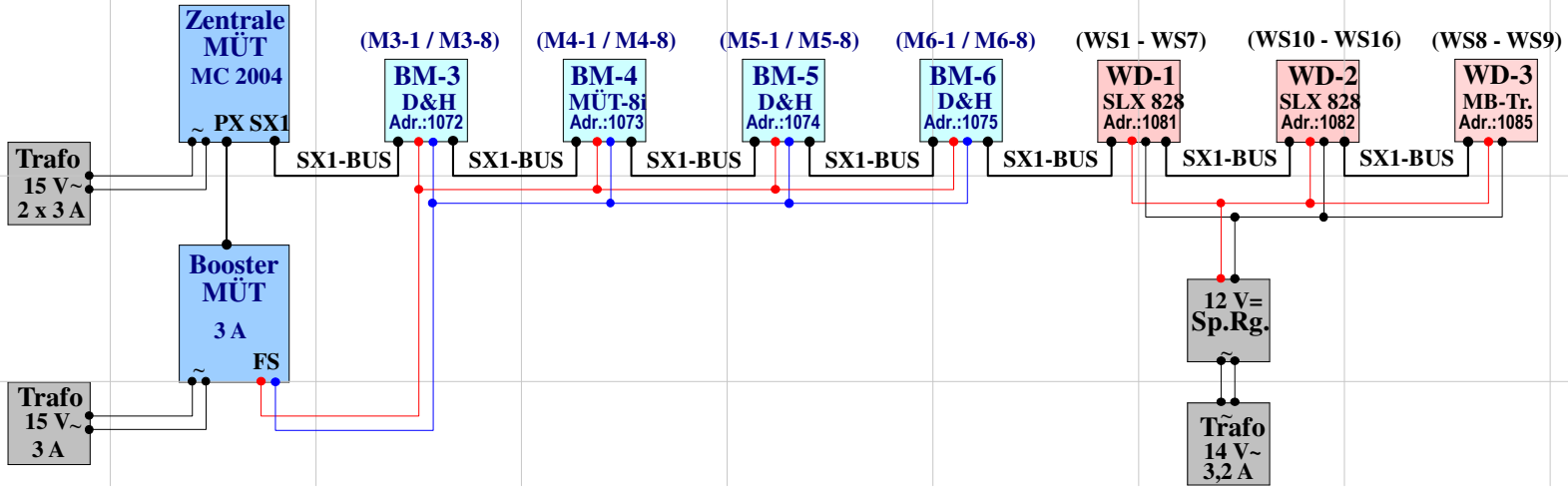
Zentrale
MÜT
MC 2004
~ PX SX1
Trafo
15 V~
2 x 3 A
Booster
MÜT
3 A
~ FS
Trafo
15 V~
3 A
(M3-1 / M3-8)
BM-3
D&H
Adr.:1072
(M4-1 / M4-8)
BM-4
MÜT-8i
Adr.:1073
(M5-1 / M5-8)
BM-5
D&H
Adr.:1074
(M6-1 / M6-8)
BM-6
D&H
Adr.:1075
(WS1 - WS7)
WD-1
SLX 828
Adr.:1081
(WS10 - WS16)
WD-2
SLX 828
Adr.:1082
(WS8 - WS9)
WD-3
MB-Tr.
Adr.:1085
SX1-BUS
12 V=
Sp.Rg.
~
Trafo
14 V~
3,2 A